NOTES:

1. ALL DIMENSIONS IN mm UNLESS OTHERWISE STATED. NO DIMENSIONS SHALL BE SCALED FROM THE DRAWINGS.
2. ALL LEVELS PROVIDED ON THIS DRAWING ARE SHOWN RELATIVE TO FINISHED STONE LEVEL. FOR SITE SPECIFIC LEVELS REFER TO SITE SECTIONS AND ELEVATIONS
3. DRAWING IS FOR PLANNING PURPOSES ONLY. NOT FOR CONSTRUCTION USE.

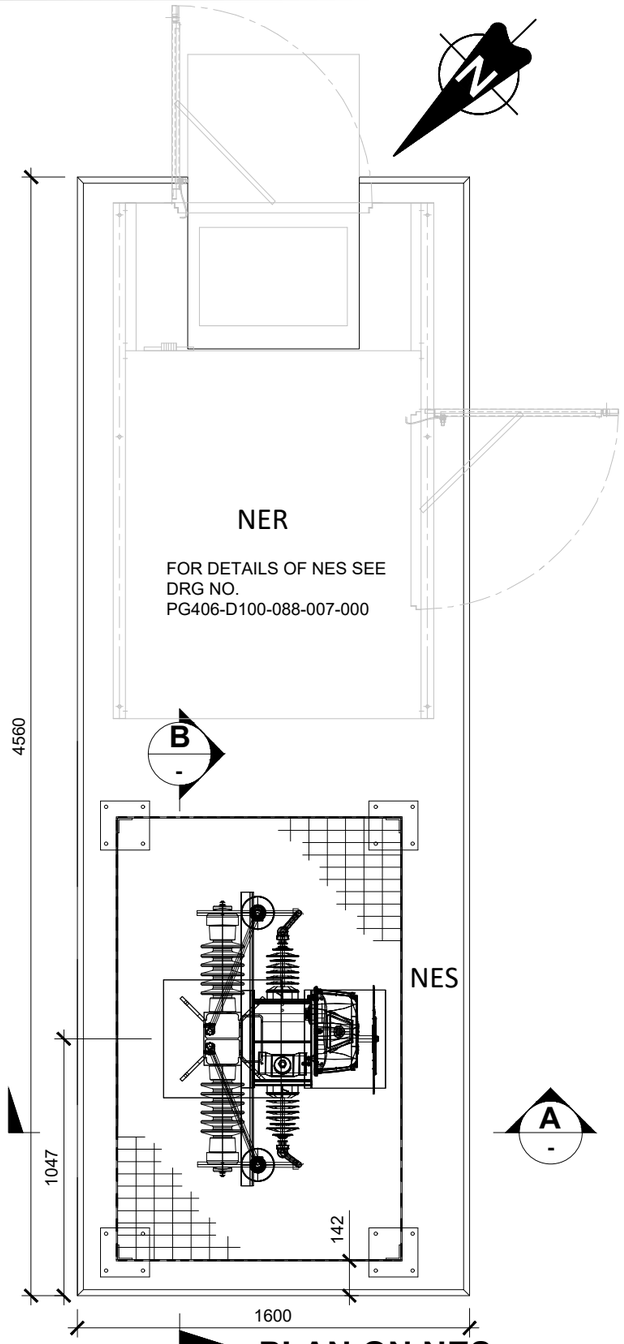

PLAN ON NES
SCALE 1:25

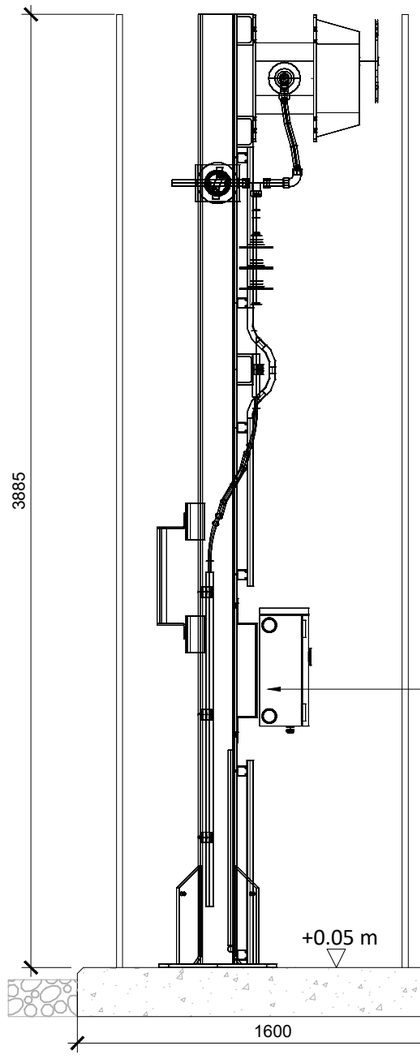

SECTION A
SCALE 1:25

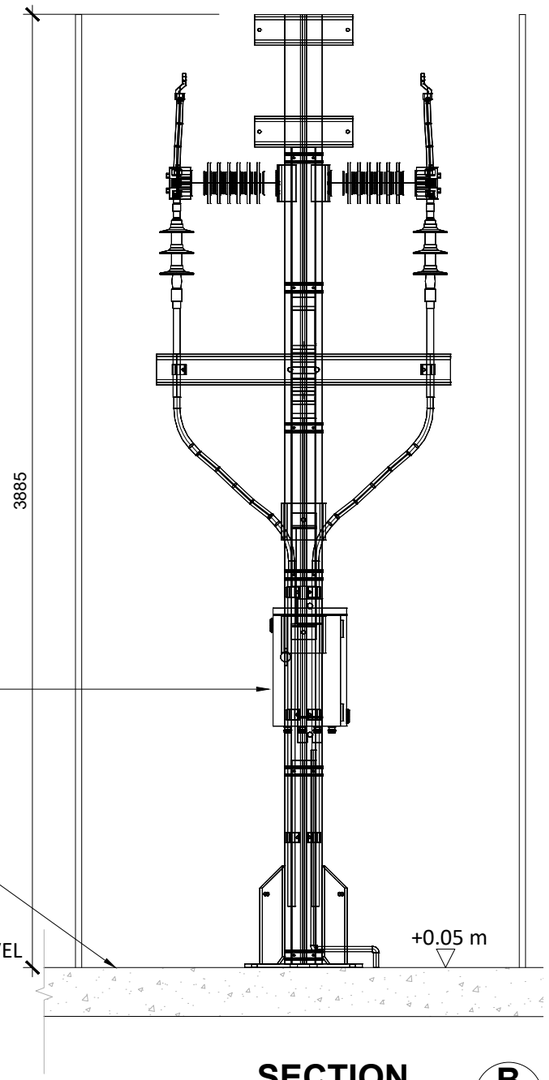

SECTION B
SCALE 1:25

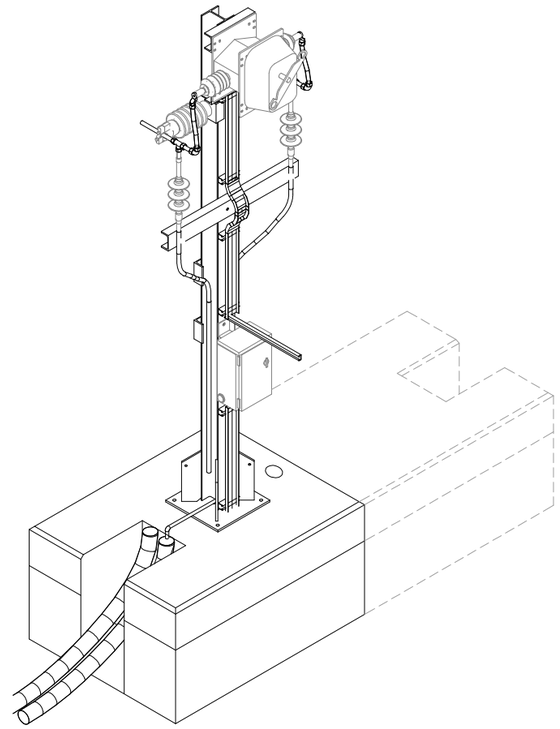

ISOMETRIC VIEW
NTS

Rev.	Date	Revision description	Drn.	Prod.	Ver.	App.
0	JUN. '25	ISSUED FOR PLANNING				

Purpose of issue - Preliminary unless indicated

Client Approval ☐ Planning ☒ Tender ☐ Construction ☐ As-Built ☐

Energy for generations

Engineering and Major Projects,
One Dublin Airport Central,
Dublin Airport, Cloghran,
Co. Dublin, K67 XF72, Ireland.

Tel: 353 1 703 8000 Web: www.esb.ie

Engineering and Major Projects is a division of ESB.

Client: ESB NETWORKS

Project: General Civil Drawings and Notes

Contract:

Drawing title: GENERAL DRAWINGS AND NOTES
PLANNING
TYPICAL NES DETAILS

Production unit: Networks Engineering

COPYRIGHT © ESB
ALL RIGHTS RESERVED. NO PART OF THIS WORK MAY BE MODIFIED, REPRODUCED OR COPIED IN ANY FORM OR BY ANY MEANS - GRAPHIC, ELECTRONIC OR MECHANICAL, INCLUDING PHOTOCOPYING, RECORDING, TAPING OR USED FOR ANY PURPOSE OTHER THAN ITS DESIGNATED PURPOSE, WITHOUT THE WRITTEN PERMISSION OF ESB.

Drawn	Produced	Verified	Approved	Approval date
J.Byrne	J.Byrne	S. Donnelly	K.ONeill	29/07/2025
Client ref.		No. of sheets	Size	Scale
TC234181		1	A3	AS SHOWN

Drawing number: PG406-D100-088-006-000 SHEET REV